ASSEMBLY INSTRUCTIONS

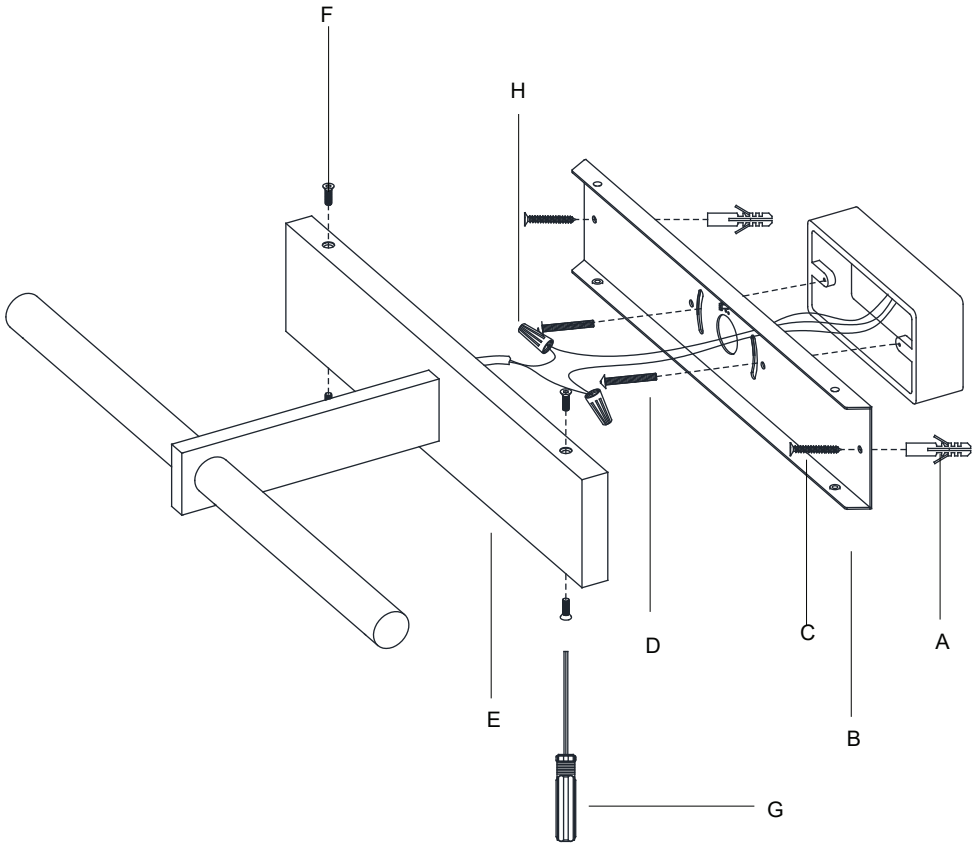

Axis 18" Picture Light

Item # KW 2733

WE RECOMMEND INSTALLATION OF THIS LIGHTING FIXTURE BE DONE BY A LICENSED ELECTRICIAN.
WARNING*SWITCH OFF THE MAIN ELECTRICAL SUPPLY FROM THE MAIN FUSE BOX/CIRCUIT BREAKER BEFORE INSTALLATION.**
INSPECT ITEM CAREFULLY BEFORE ATTEMPTING TO INSTALL. IF THERE IS ANY DAMAGE OR OBVIOUS DEFECT. DO NOT INSTALL.
ITEM MAY NOT BE RETURNED ONCE IT HAS BEEN INSTALLED.
NOTE: CAREFULLY UNPACK EACH PIECE IN TOP LAYER OF PACKING PRIOR TO REMOVING. RETAIN ALL PACKING MATERIAL UNTIL INSPECTION AND INSTALLATION ARE FINAL.

1. Carefully remove all parts from the box.
2. Remove the mounting plate (B) from the fixture body (E) by loosening the set screws (F) using the set screwdriver (G) provided.
3. Put the mounting plate (B) on the wall, mark the anchor holes position with pencil (not included). Drill holes on the wall and knock the anchors (A) into the holes.
4. Install the mounting plate (B) to the junction box and secure with the mounting screws (D), then secure the wood screws (C) to the anchors (A) and lock tight.
5. Wrap the junction box ground wire to the green ground screw on the mounting plate (B) and secure.
   IT IS IMPERATIVE THAT THIS FIXTURE BE GROUNDED.
6. Connect the fixture white wire to the neutral wire in the junction box using the wire nut (H).
7. Connect the fixture black wire to the hot wire in the junction box using the wire nut (H).
   DO NOT REVERSE THE HOT AND NEUTRAL CONNECTIONS OTHERWISE SAFETY WILL BE COMPROMISED.
8. Install the fixture body (E) to the mounting plate (B) and secure with the set screws (F) using. the set screwdriver (G) provided.
9. Rotate the shade to desired angle.
10. Installation is complete, turn on power at fuse or circuit breaker.

***Clean with a dry, soft cloth only. Use no harsh abrasives or chemical agents.